Extrusion, ironing

Content

- **Forward (direct) extrusion**
  - parts
  - profiles
- **Backward (indirect) extrusion**
- **Combined extrusion**

- **Ironing**

Extrusion

Forward extrusion

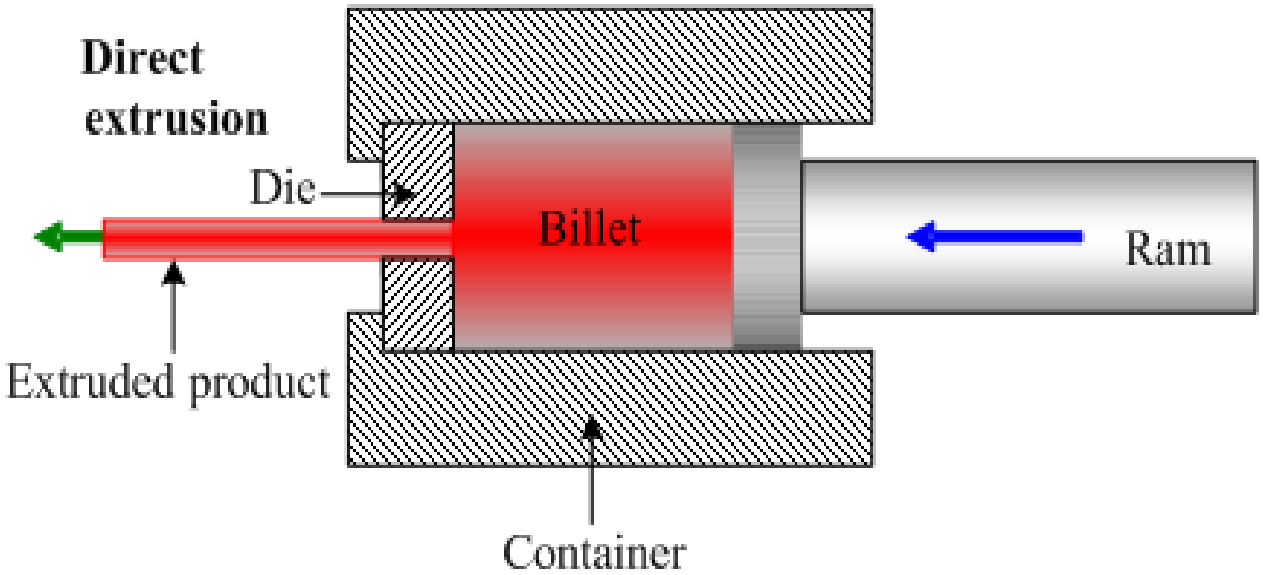

Combined extrusion

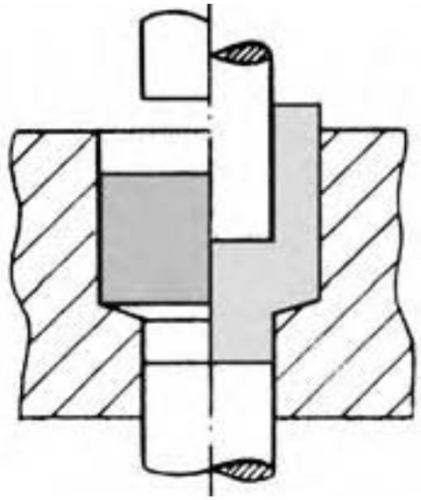

Backward extrusion

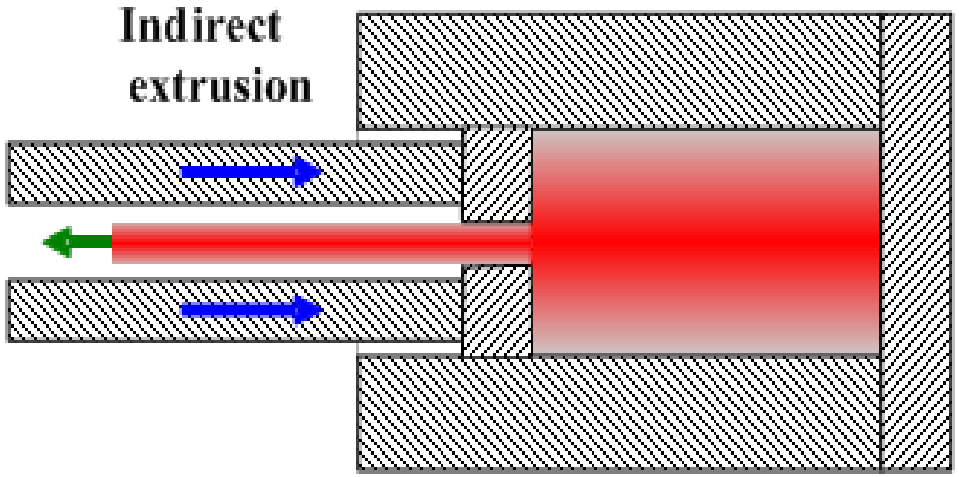

Extruded parts

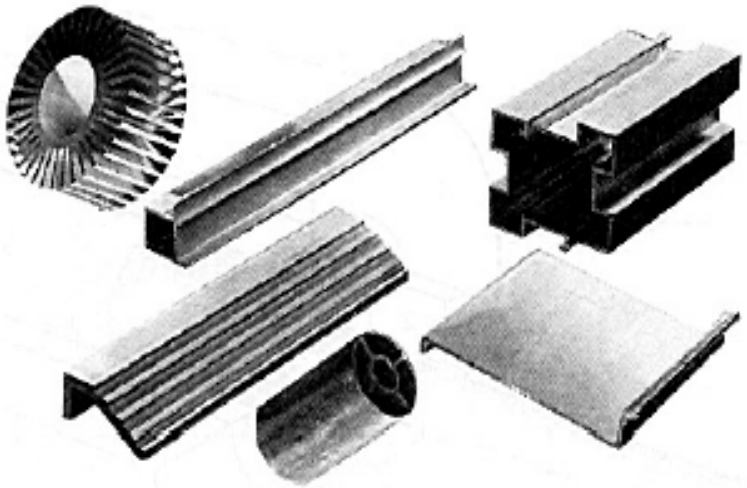

Forward extrusion

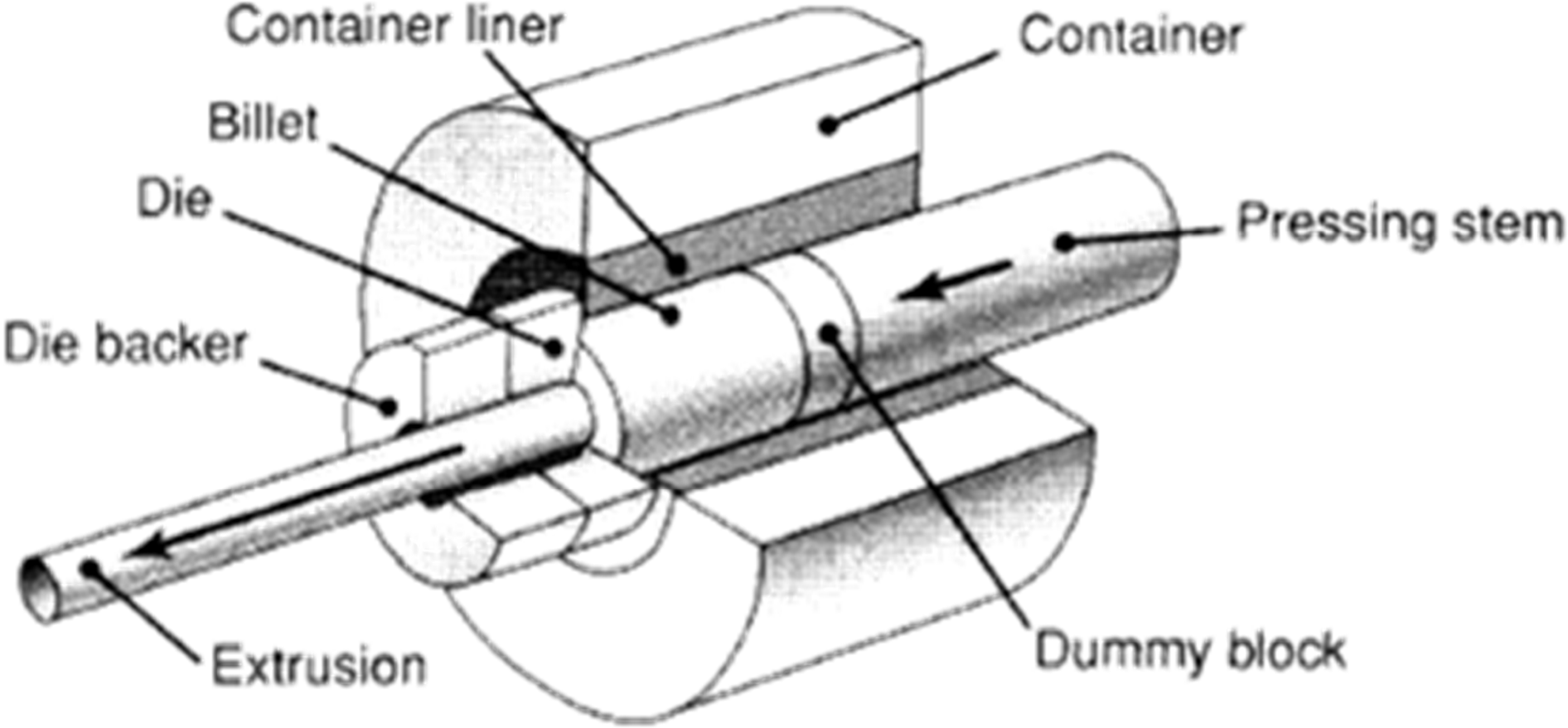

Forward extrusion

Products made by sectioning off extruded profiles :

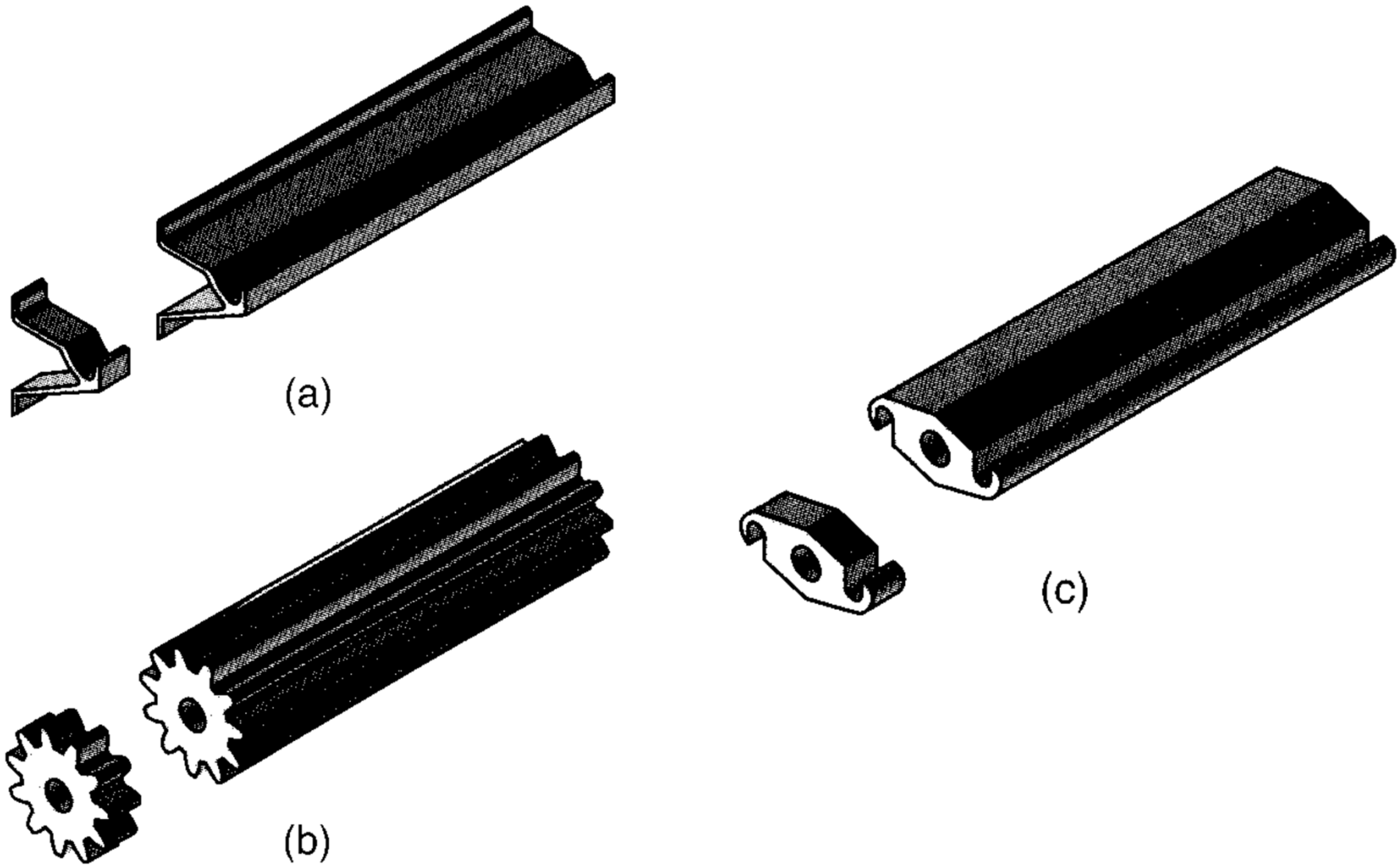

Forward extrusion

Forward extrusion – die design

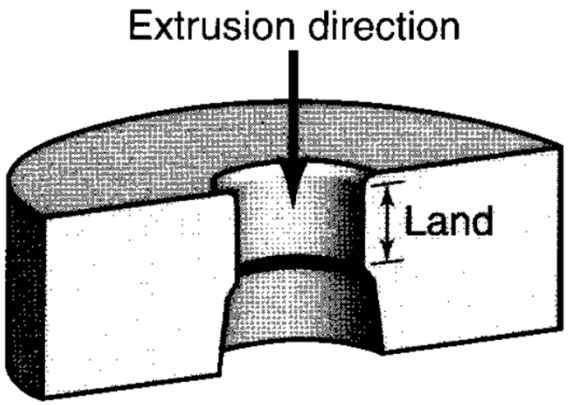

(a)

for nonferrous metals

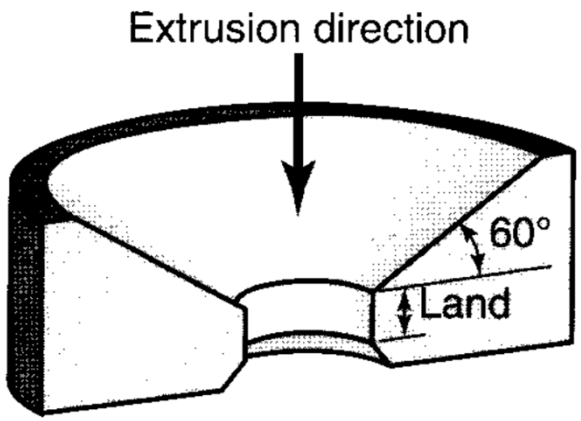

(b)

for ferrous metals

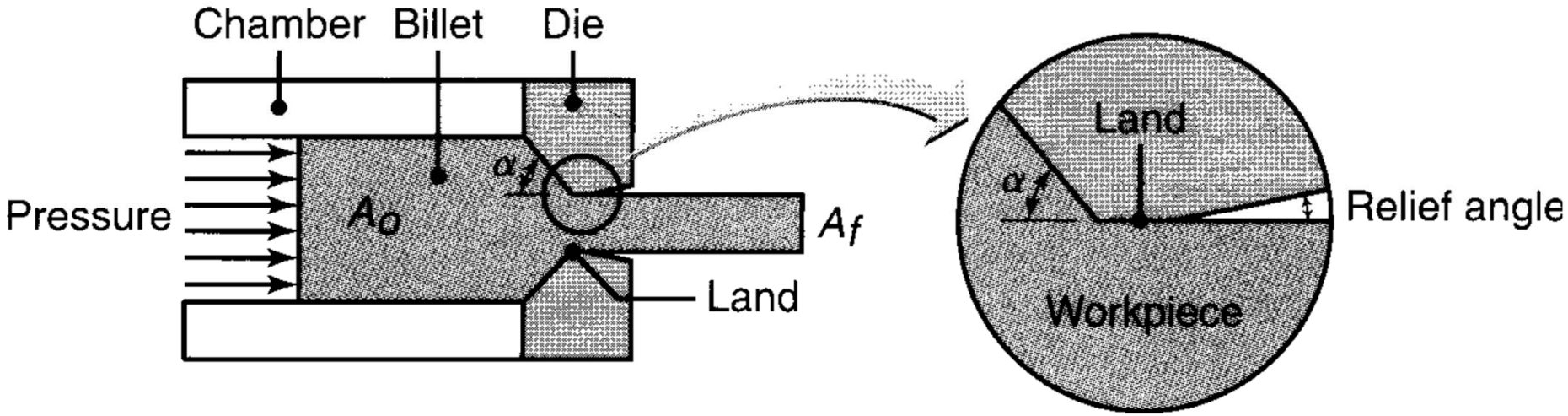

Forward extrusion

Forward extrusion of seamless tubes and hollow cross sections

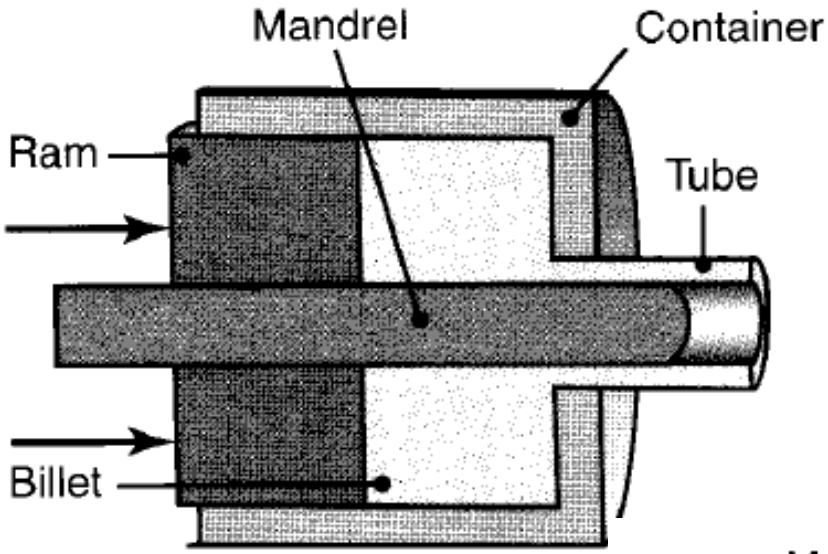

using an internal mandrel

using a spider die

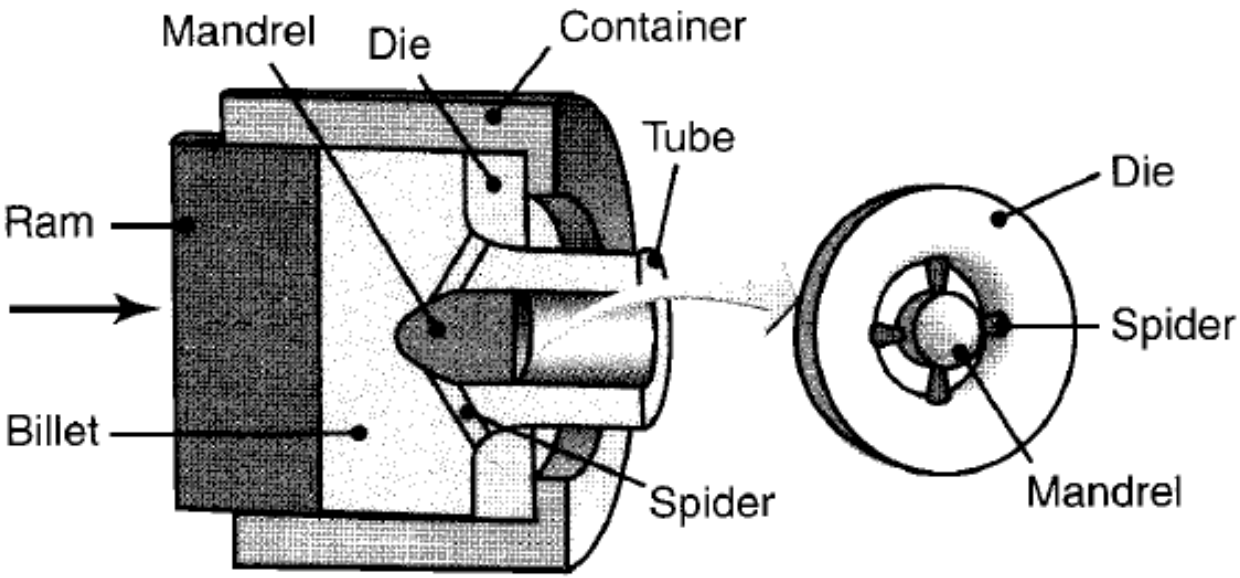

Forward extrusion

Metal flow in right angle extruding dies

„die angle" is formed on the interface of dead zones and flowing metal

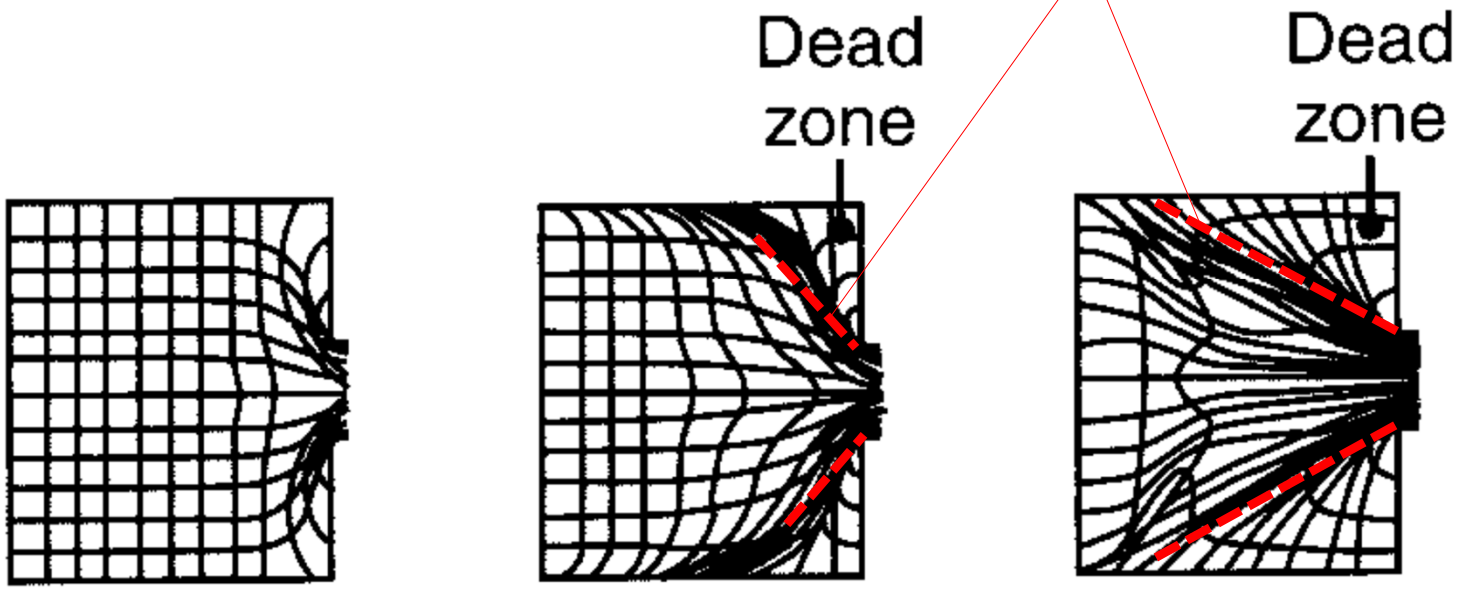

low friction in direct extrusion

high friction

high friction and/or cooling from outside

Forward extrusion - parts

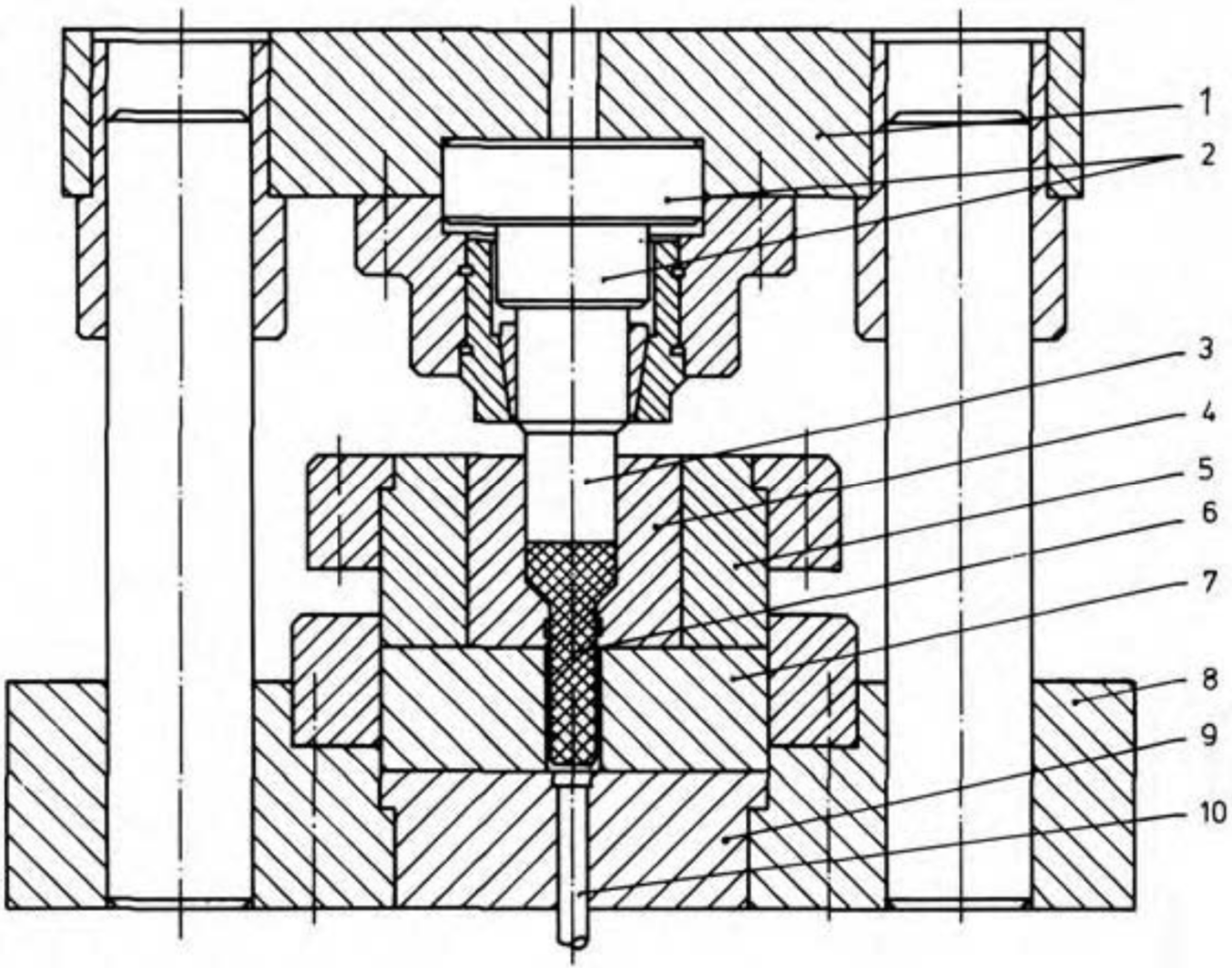

1 top plate
2 pressure plate
3 punch
4 die
5 retaining ring (shrink fit)
6 workpiece
7 distance plate
8 base plate
9 pressure plate
10 ejector

Forward extrusion – defects

Surface cracking

Stick-slip – bamboo defect

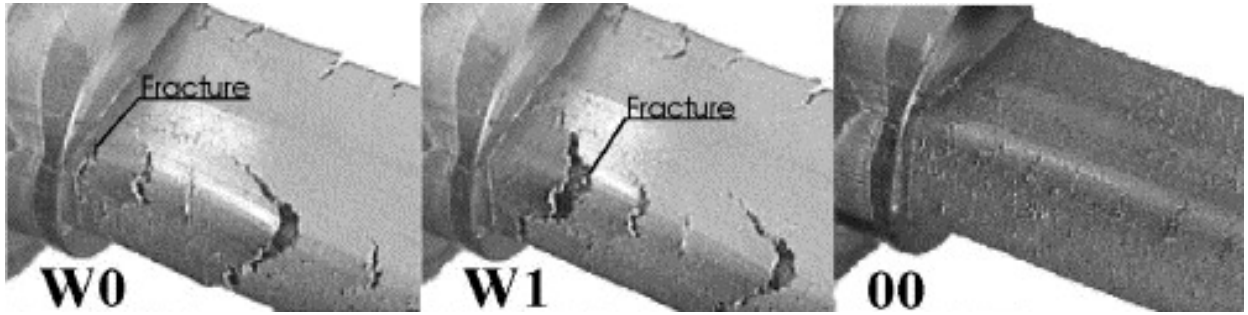

Pipe (fishtail) defect

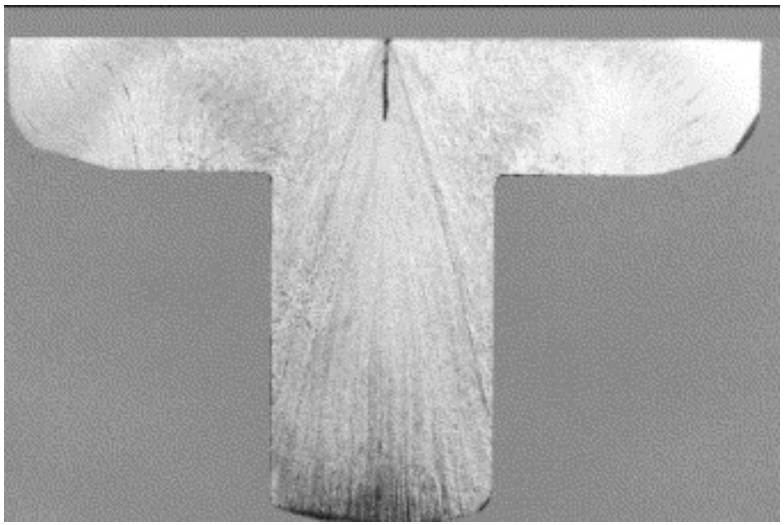

Internal cracking

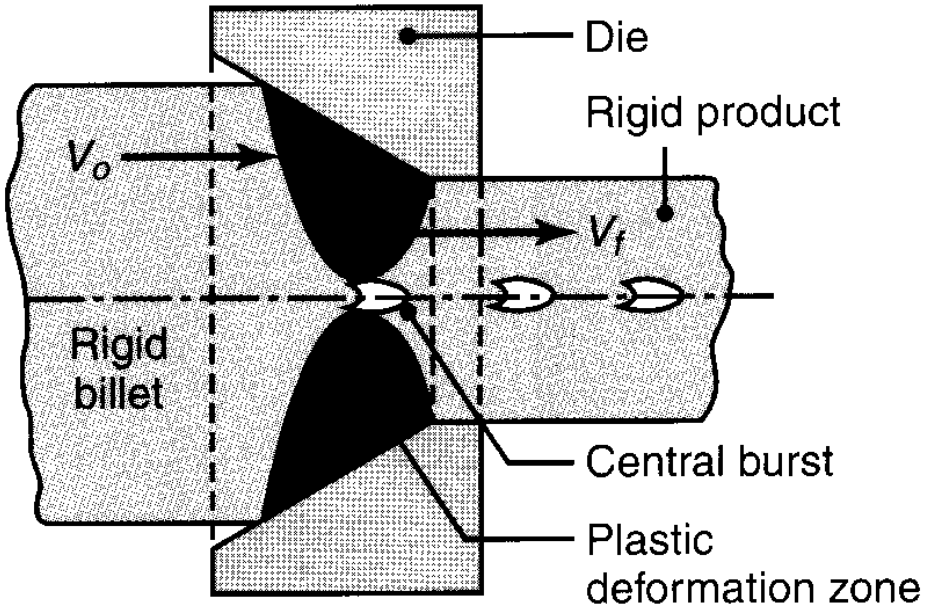

Forward extrusion – calculation

Force: $F = \dfrac{A_o\, \sigma_{fm}\, \varphi_p}{\eta_F}$ $\eta_F = 0.6–0.8$

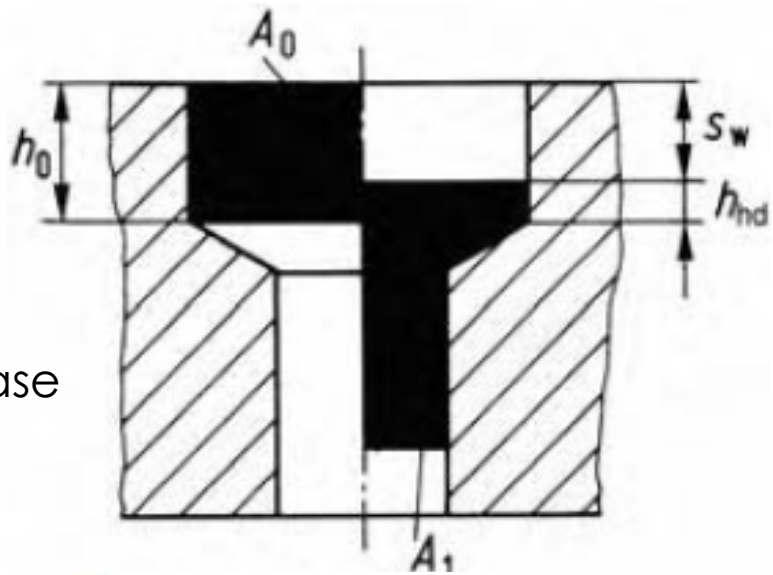

Stress – on punch : $\sigma_{ax} = \dfrac{F}{A_o}$

– on recipient : $\sigma_r = \sigma_{ax}$ (hydrostatic case is supposed)

Mechanical work :

$W = F\, s_w\, x$ (may use x=1)

$s_w = h_0 - h_{hd}$ (active stroke)

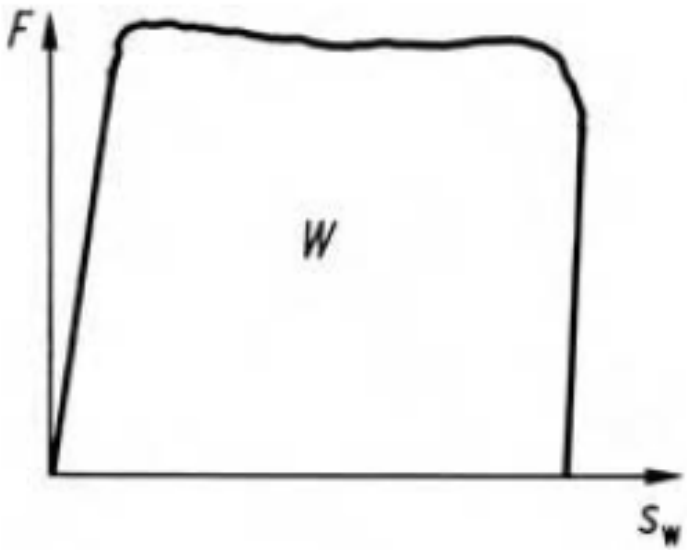

F	in N	extrusion force
A_0	in mm^2	area before forming
σ_{fm}	in N/mm^2	mean flow stress
φ_p	–	principal strain
η_F	–	deformation efficiency
W	in Nm	strain energy
s_w	in mm	displacement
h_0	in mm	blank height
h_{hd}	in mm	head height
h_1	in mm	bottom thickness
x	–	process factor
A_p	in mm^2	cross-sectional area of the punch

Backward extrusion

Cold backward extrusion process

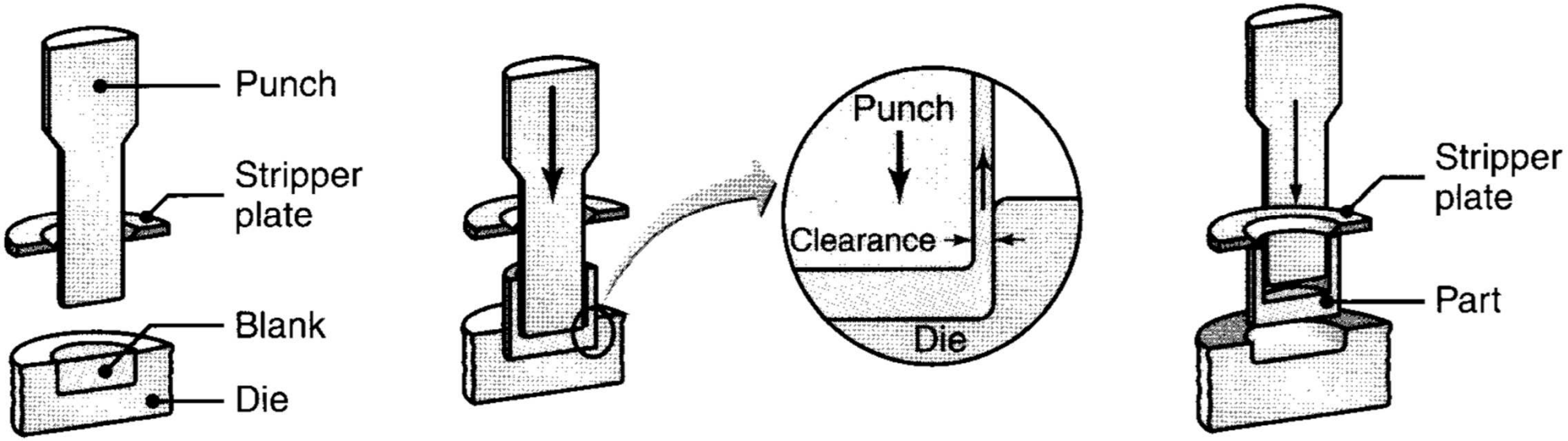

Backward extrusion

Extrusion of a collapsible tube

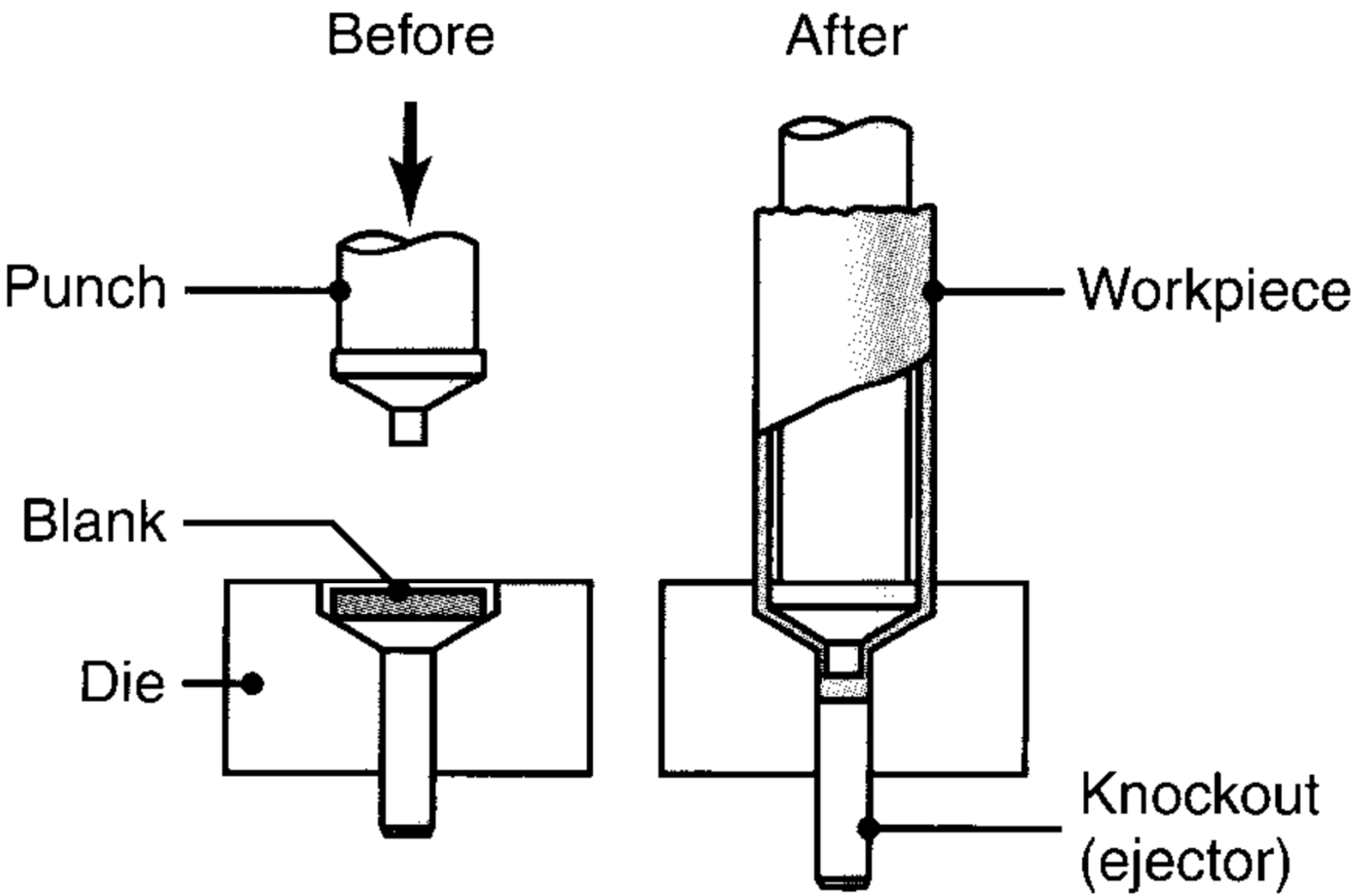

Backward extrusion – tooling

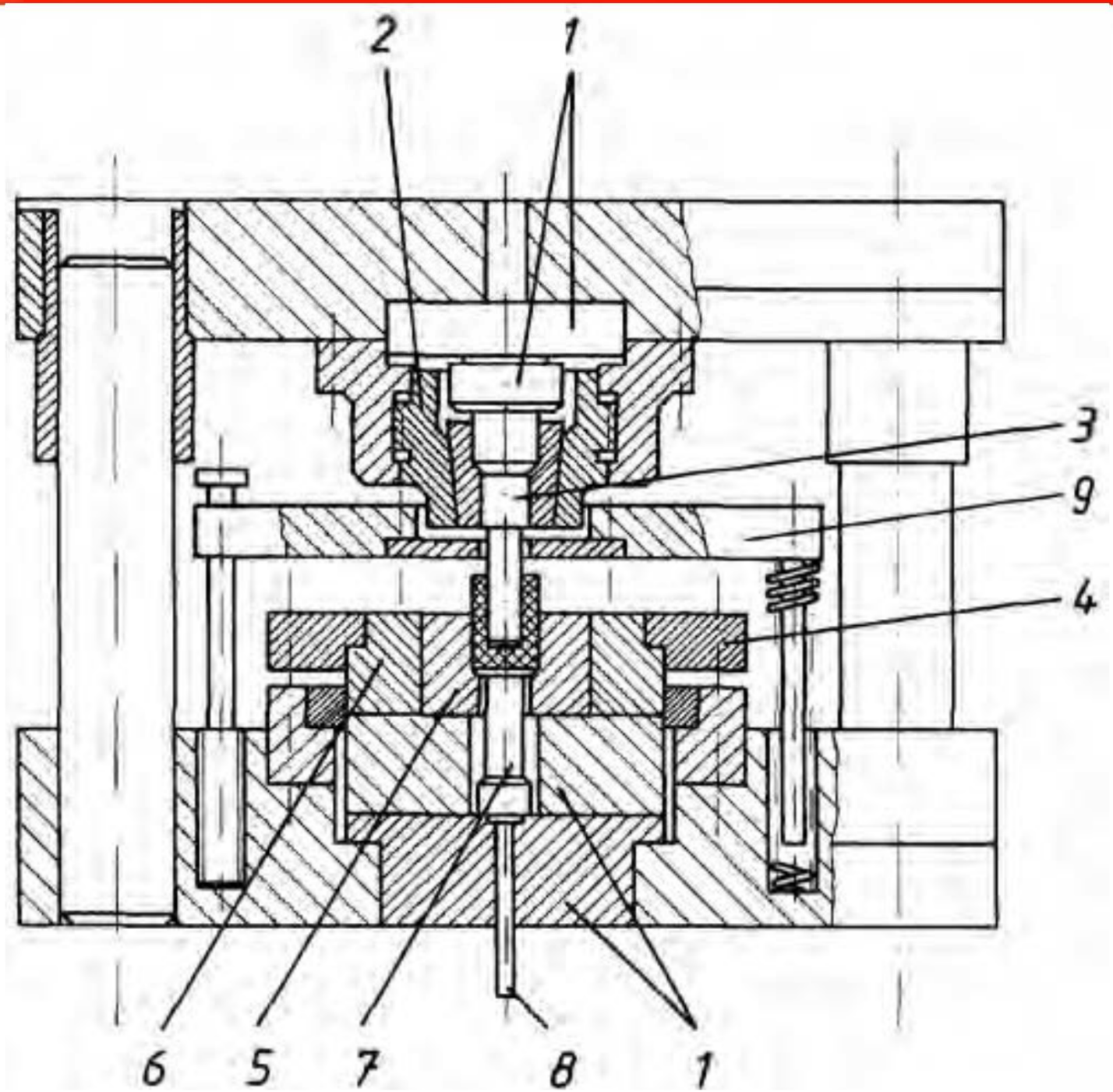

1 die plate
2 clamp nut for punch
3 punch
4 tension ring for the die
5 die
6 retaining ring (reinforcement)
7 counter-punch
8 ejector
9 stripper

Backward extrusion - defects

Surface cracking Stick-slip – bamboo defect

(as in the case of forward extrusion)

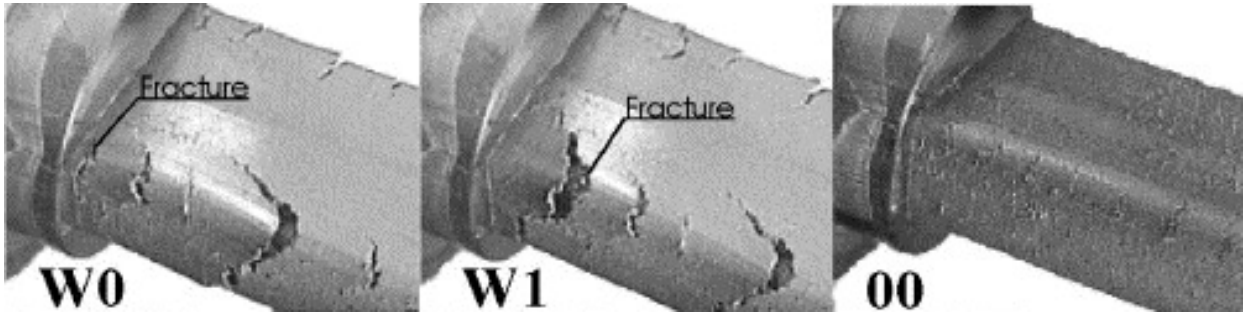

Cracks on the inner and outer surface

Backward extrusion – calculation

Force for thick-walled parts – $D_o/s \leq 10$:

$$F = \frac{A_o\, \sigma_{fm}\, \varphi_p}{\eta_F} \qquad \eta_F = 0.5\text{–}0.7$$

Force for thin-walled parts – $D_o/s \geq 10$:

$$F = \frac{A_p\, \sigma_{fm}}{\eta_F}\left(2 + \frac{h_0}{4\, s}\right)$$

Stress – on punch : $\sigma_{ax} = \frac{F}{A_o}$

– on recipient : $\sigma_r = \sigma_{ax}$

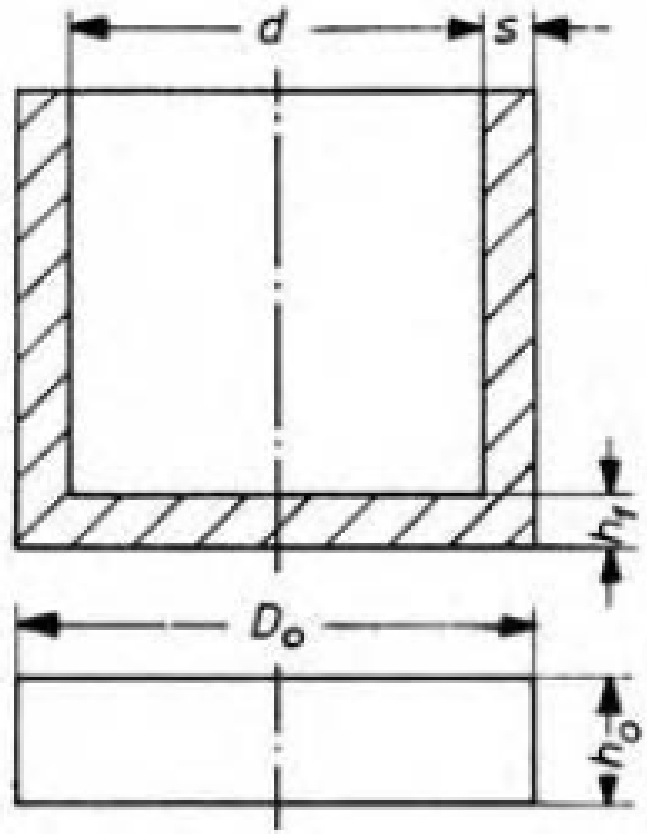

Mechanical work:

$$W = F\, s_w\, x \qquad \text{(may use x=1)}$$

$$s_w = h_0 - h_1$$

Combined extrusion

Combination of forward and backward extrusion :

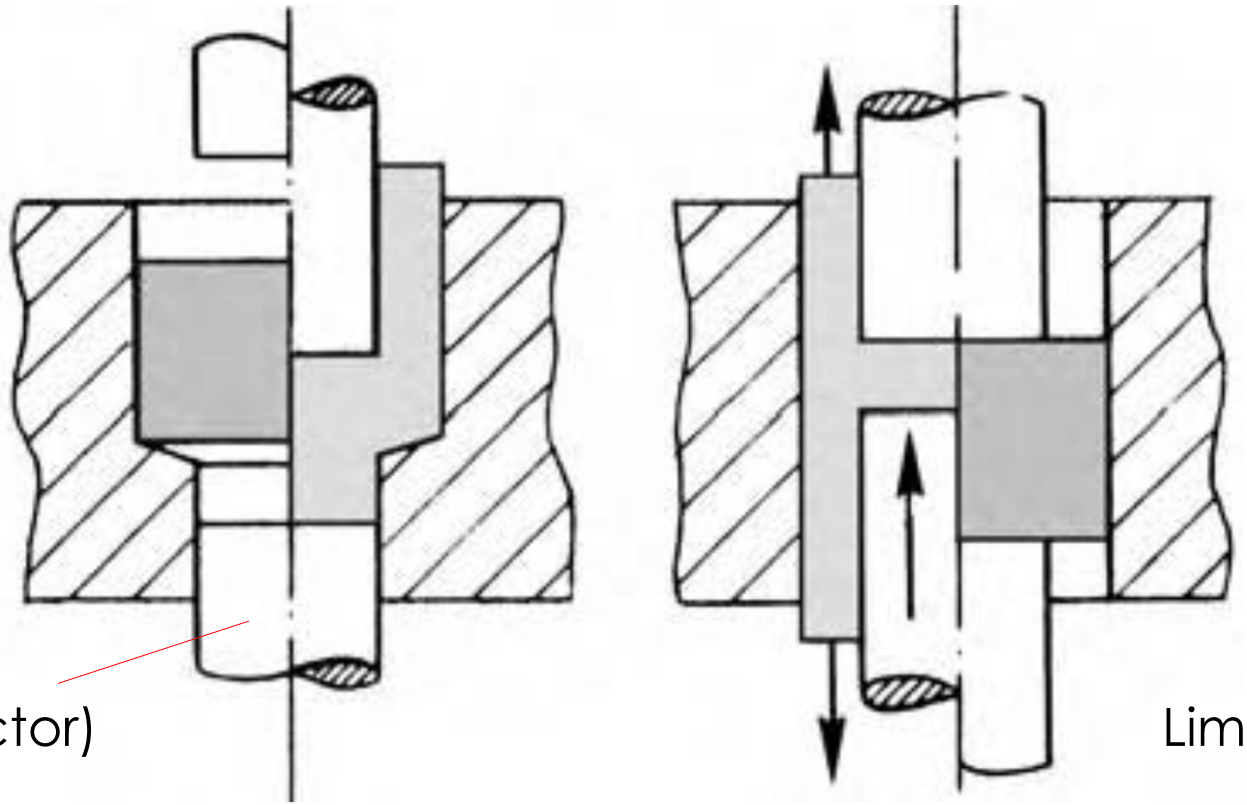

Limiter (ejector)

Limiter ???

The material flows forward and backward as well – one of them should be limited to get identical workpieces.

Reinforced die

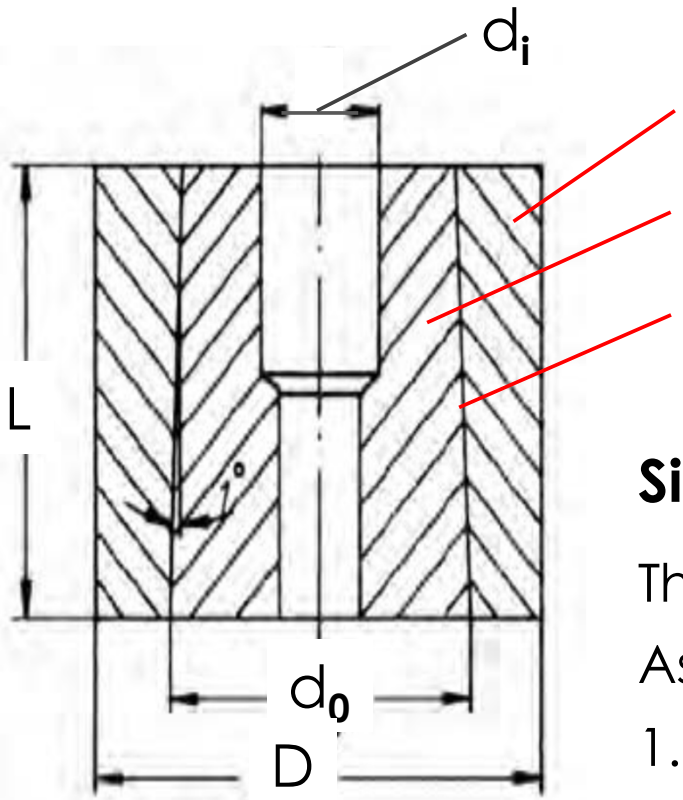

retaining ring

die

conical fit (1°)

Simplified calculation

The die is a thick-walled tube.

Assumptions:

1. The axial deformation is constant;
2. The material is isotropic and homogeneous;
3. The wall thickness is constant;
4. The pressure acts along the whole length;
5. The pressure distribution is homogeneous.

Reinforced die

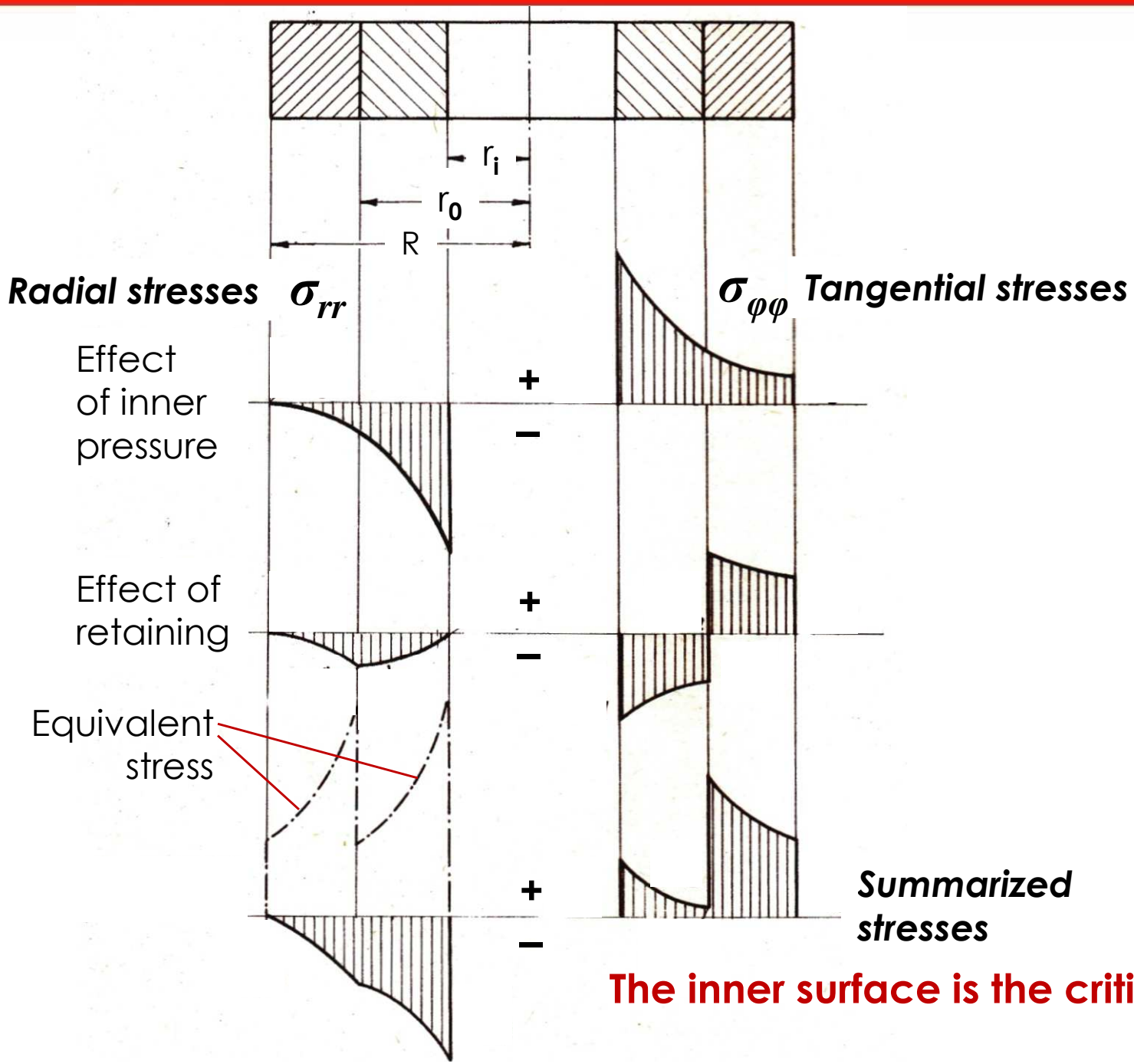

The inner surface is the critical.

Reinforced die

$$\sigma_{rr} = \frac{p_i r_i^2 - p_o r_o^2}{r_o^2 - r_i^2} - \left(p_i - p_o\right)\frac{r_o^2 r_i^2}{r_o^2 - r_i^2}\frac{1}{r^2}$$

$$\sigma_{\phi\phi} = \frac{p_i r_i^2 - p_o r_o^2}{r_o^2 - r_i^2} + \left(p_i - p_o\right)\frac{r_o^2 r_i^2}{r_i^2 - r_i^2}\frac{1}{r^2}$$

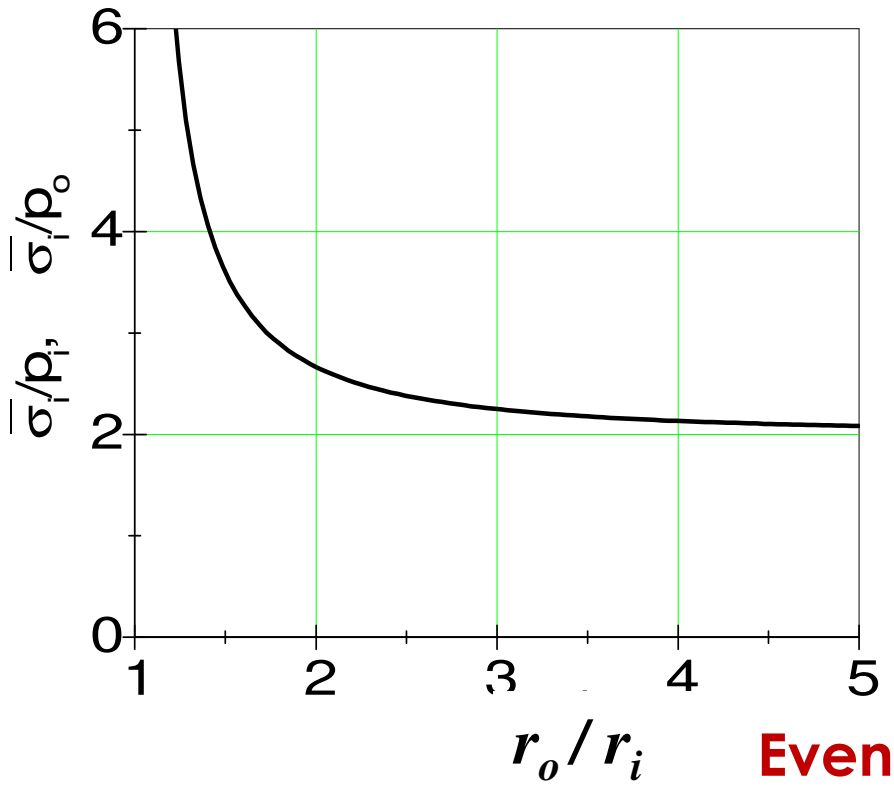

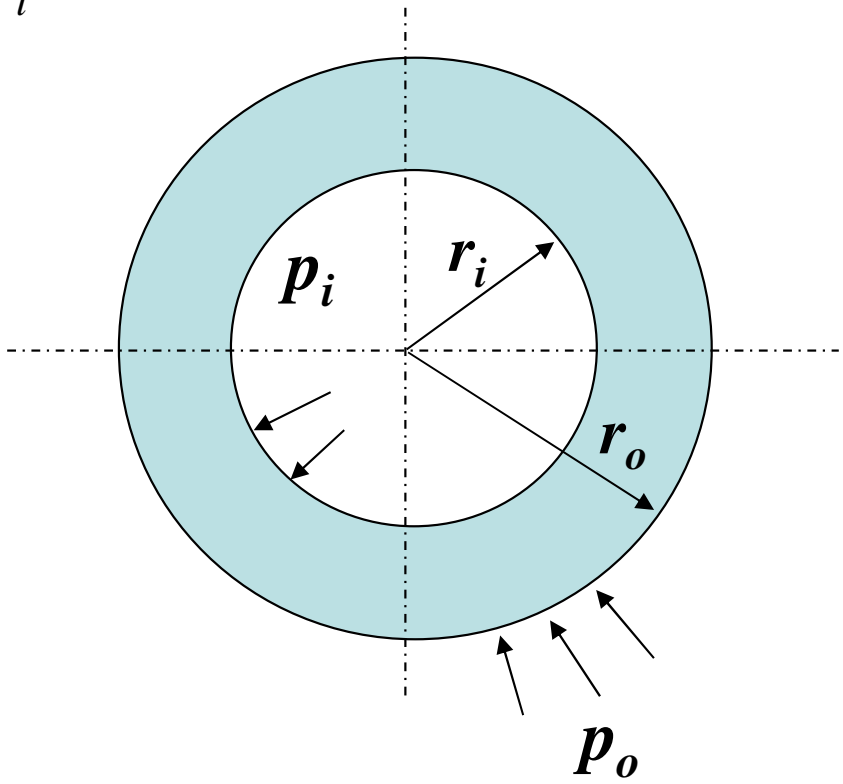

Even the unlimited r_o is useless.

Reinforced die

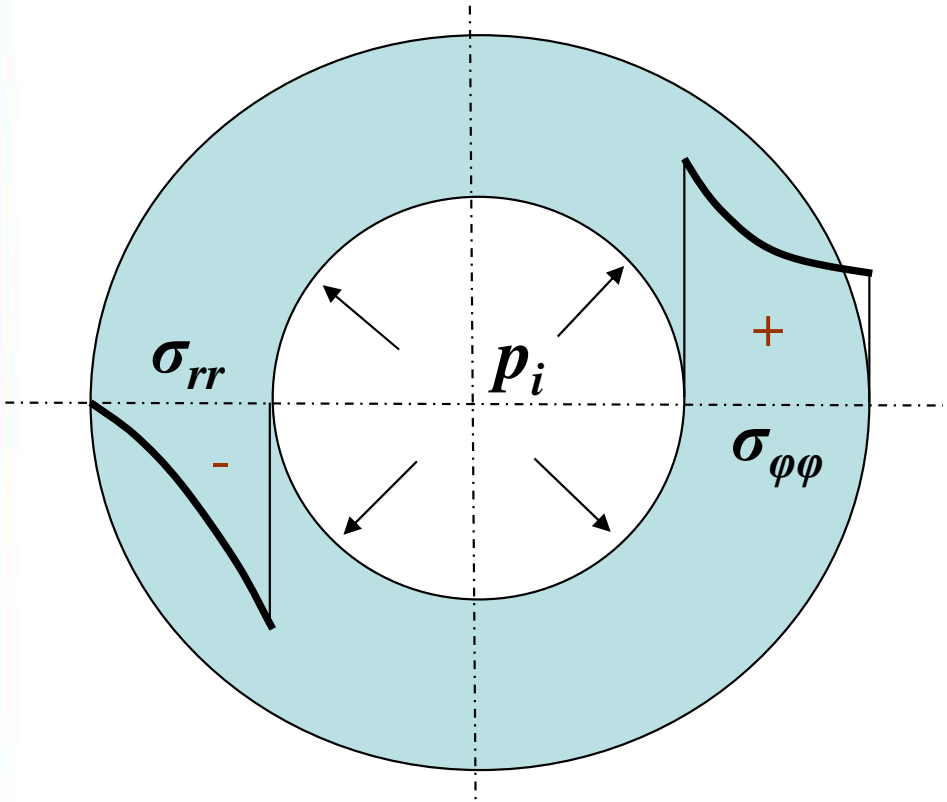

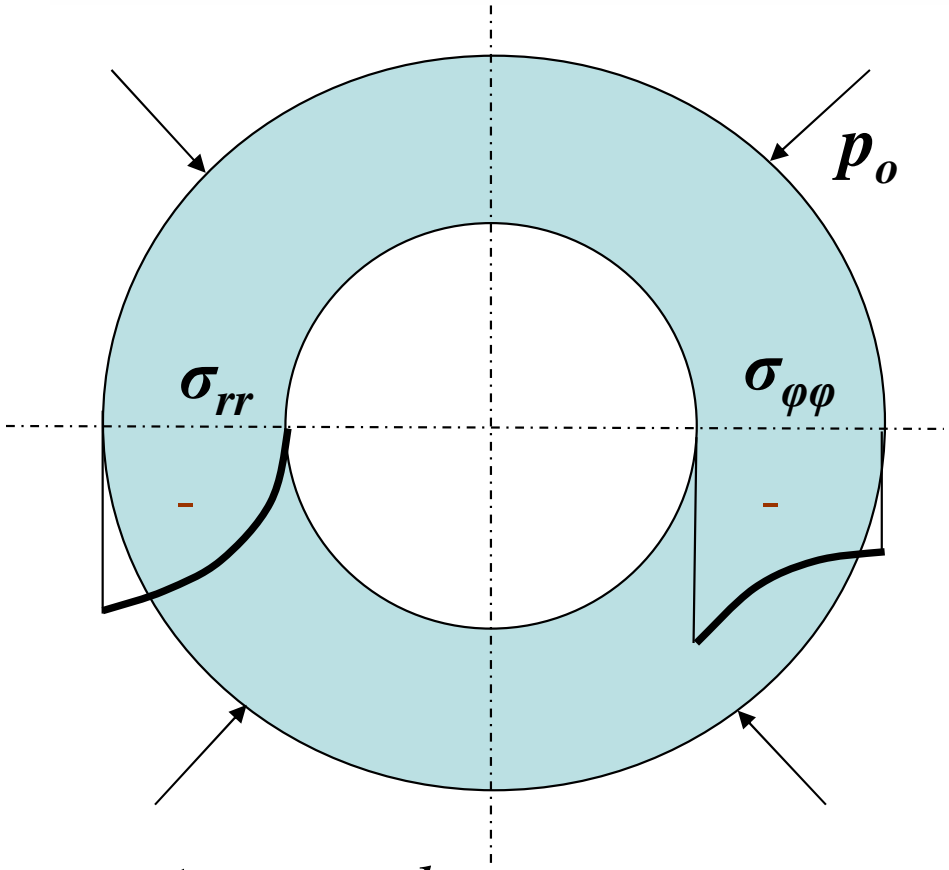

Mohr yield theory: $\sigma_{\max} - \sigma_{\min} \leq \sigma_{yield} = k$

$$\frac{\bar{\sigma}_i}{\bar{\sigma}_o} = \left(\frac{r_k}{r_b}\right)^2 = a^2 \qquad \frac{\bar{\sigma}_i}{\bar{\sigma}_o} = \frac{2a^2}{a^2+1}$$

Always the inner surface is the critical.

Reinforced die

$\sigma_{\varphi\varphi\, b} > 0$ (steel)

$p_i > p_o$

$\sigma_{\varphi\varphi\, b} = 0$ (carbide)

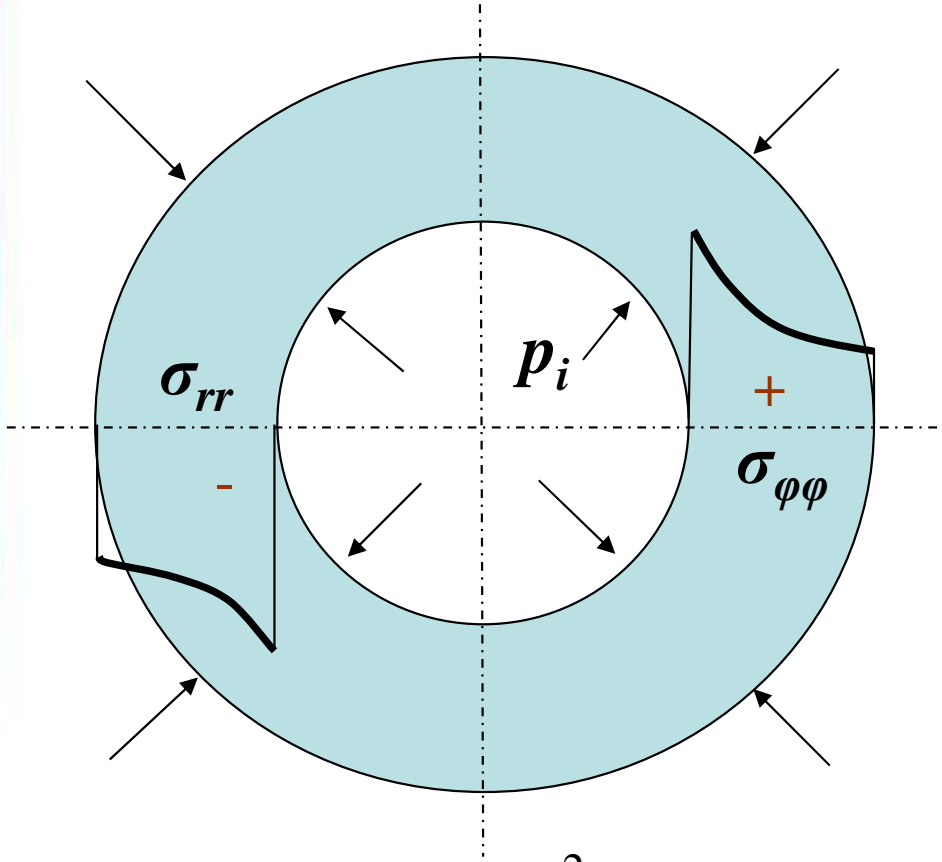

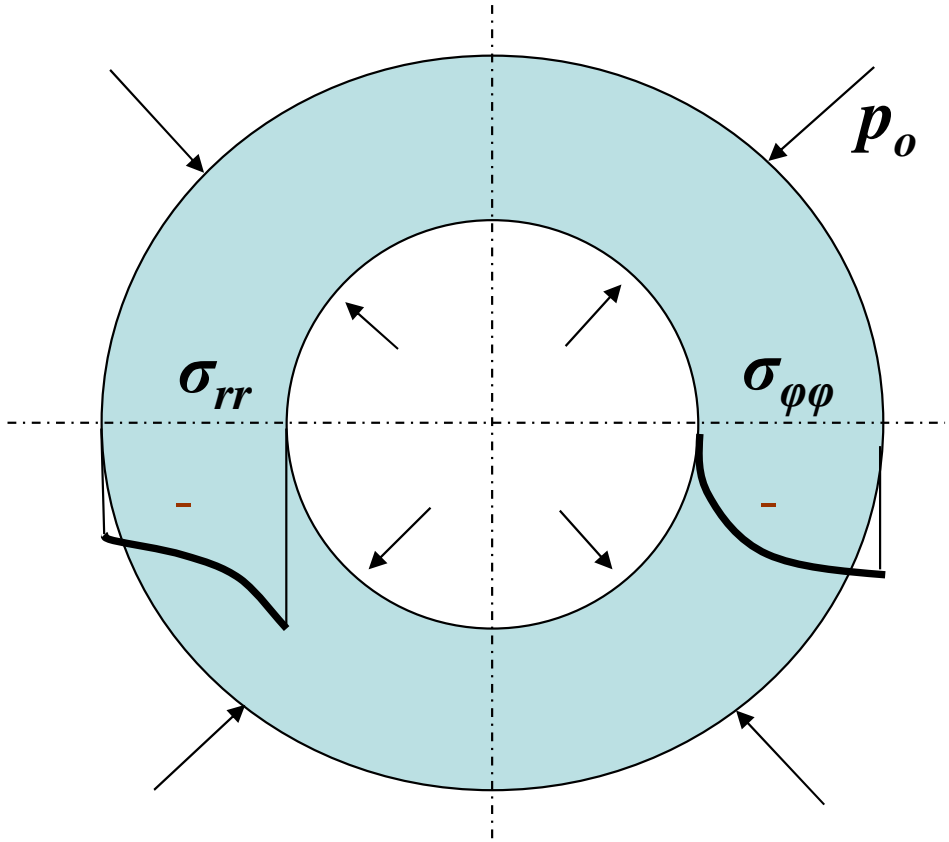

$$p_{i\,permissible} = k\,\frac{a^2-1}{2a^2} + p_o$$

$$p_o = p_i\,\frac{a^2+1}{2a^2}, \qquad p_{i\,permissible} = k$$

Dimensioning in Excel is available on the web page.

Reinforced die

Dimensioning in Excel is available on the web page (steel-steel)

The file contains using manual as well.

Calculate

Számol

R_k:	107,997		a_{min}:	3,60		p_{1max}: 1047,5

n	k_i	E_i	μ_i	a_i	R_{bi}	δ_i
	1500	210000	0,3	1,930	30	
	1400	210000	0,3	1,865	57,910	0,2751
		210000	0,3			
		210000	0,3			
		210000	0,3			

p_2:	281,7		σ_{tb}:	770,1		p_{krit}: 13440,9

Another Excel file is available for carbide-steel solution.

Die materials for extrusion

	Material		Assembly hardness HRC	Used for				R_e
	Name	No.		Punch	Die	Rein-forcement	Ejector	N/mm^2
Tool steels	S 6-5-2 (M 2)	1.3343	62 to 64	× ×	× ×		× ×	2100
	S 18-0-1 (B 18)	1.3355	59 to 62	× ×	×			2100
	S 6-5-3 (M 4)	1.3344	62 to 64	× ×				2200
	X 165 CrMoV 12	1.2762	60 to 62	×	×		×	2000
	X 40 CrMoV 51	1.2344	50 to 56		×	× ×	×	1200 – 1400
	42 CrMo 4	1.7225	30 to 34			× ×	×	700 – 900
Hard metals	G 40		1100 HV	×	×			
	G50		1000 HV		×			
	G60		950 HV	×	× ×			

× – suitable; × × – used most commonly; elastic modulus of steel = 210,000 N/mm^2

Achievable precision

Cold extrusion - for steel

Applies to	Range in mm						Mass in kg
	up to 10	over 10 to 16	over 16 to 25	over 25 to 40	over 40 to 63	over 63 to 100	
Inside diameter	0.05	0.06	0.06	0.07	0.08		up to 0.1
	0.08	0.09	0.10	0.11	0.12	0.14	– 0.5
	0.10	0.11	0.12	0.14	0.16	0.18	– 4.0
	0.12	0.14	0.16	0.18	0.20	0.22	– 25
Outside diameter	0.09	0.11	0.14	0.18	0.22	0.28	up to 0.1
	0.14	0.18	0.22	0.28	0.35	0.45	– 0.5
	0.18	0.22	0.28	0.35	0.45	0.56	– 4.0
	0.22	0.28	0.35	0.45	0.56	0.71	– 25

Achievable precision

Wall thickness tolerances for backward (impact) extrusion

Wall thickness in mm	Tolerance in mm
0.3 to 0.6	± 0.05
0.6 to 1.0	± 0.075
1.0 to 2.5	± 0.1
>2.5	± 0.2

Surface quality

High surface quality, if :

a) the surface quality of the dies is good,
b) the lubricant and its application have been made correctly,
c) the deformation remains within the permissible limits.

It is possible to achieve surface roughness in the region of

R_t = 5 to 10 μm

Ironing (wall ironing)

Bulk forming process where the wall is deformed.

Limit:

If the stress in the formed cup wall exceeds the tensile strength of the cup material, the cup base splits off.

Flanged hollow parts and hollow parts with inner tapering can also be produced.

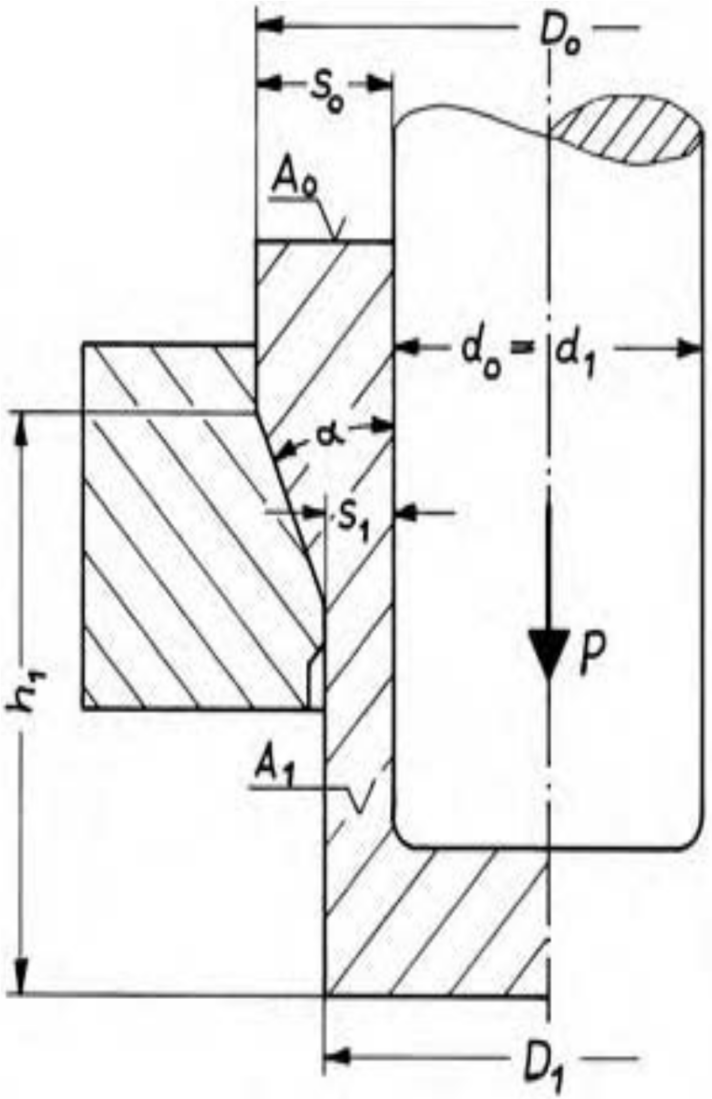

Ironing - calculation

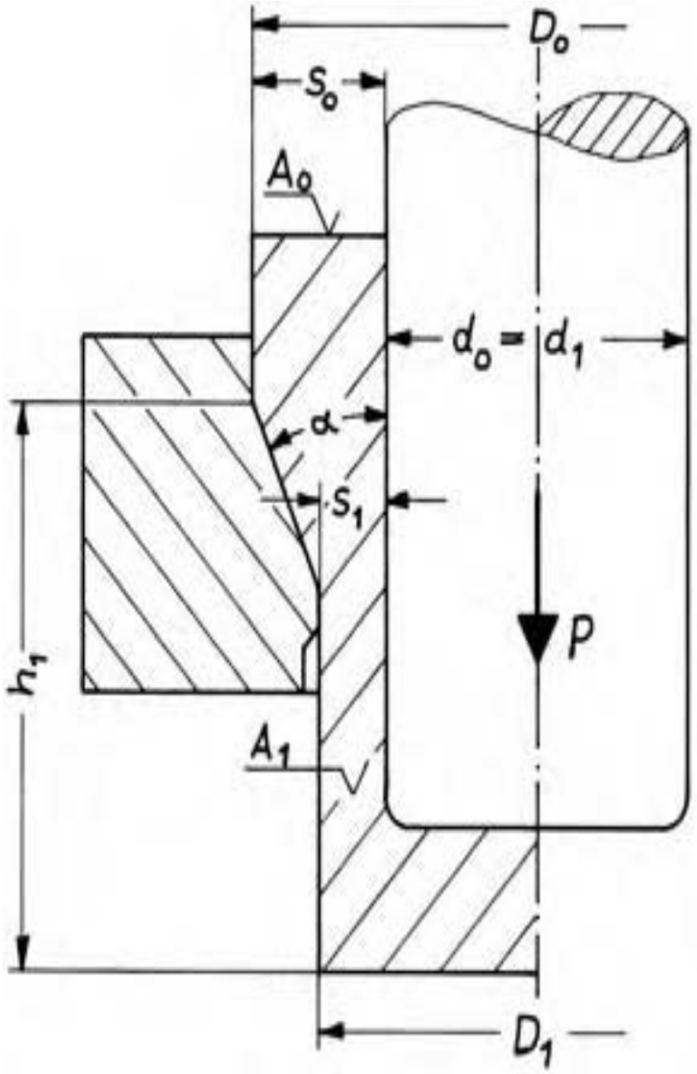

$$\varphi_p = \ln\frac{A_0}{A_1} = \ln\frac{D_0^2 - d_0^2}{D_1^2 - d_0^2} = \ln\frac{D_0^2 - d_0^2}{D_1^2 - d_1^2}$$

A_0 – ring area before forming

A_1 – ring area after forming

D_0 – external diameter before forming

d_0 – inside diameter before forming

D_1 – external diameter after forming

d_1 – inside diameter after forming (usually $d_0 = d_1$)

φ_p – principal strain

Ironing - calculation

Limited diameter, if $d_0 = d_1 = \text{const.}$

$$D_1 = \sqrt{\frac{D_0^2 - d_0^2}{e^{\varphi p}} + d_0^2}.$$

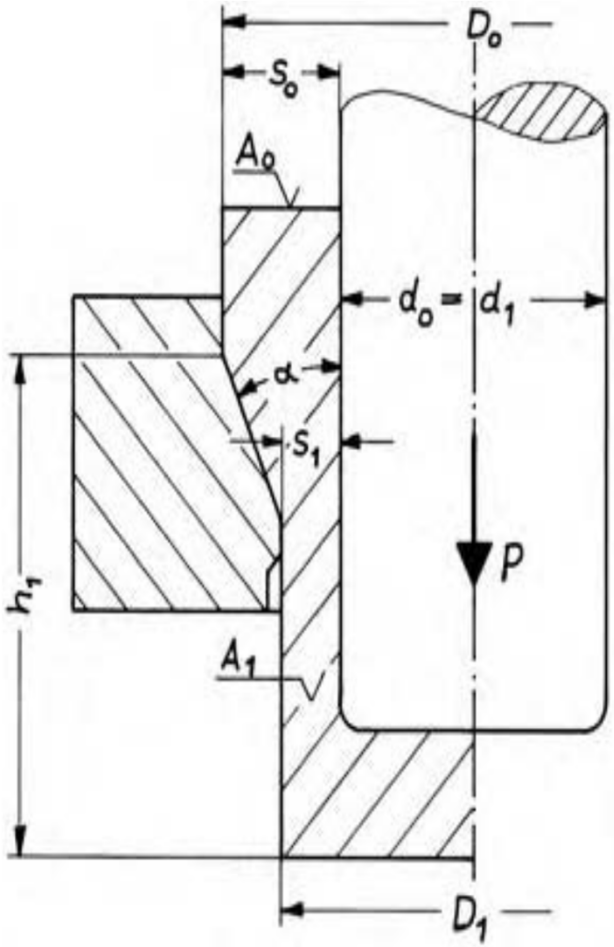

Permissible deformation in one step

Material	$\varphi_{p\,perm}$
Al 99.8; Al 99.5; Al Mg 1; Al MgSi 1; Al Cu Mg 1	0.35
Cu Zn 37(Ms 63)	0.45
Ck 10 – Ck 15,Cq 22 – Cq 35	0.45
Cq 45; 16 Mn Cr 5; 42 Cr Mo 4	0.35

Ironing - calculation

Number of ironing operations required:

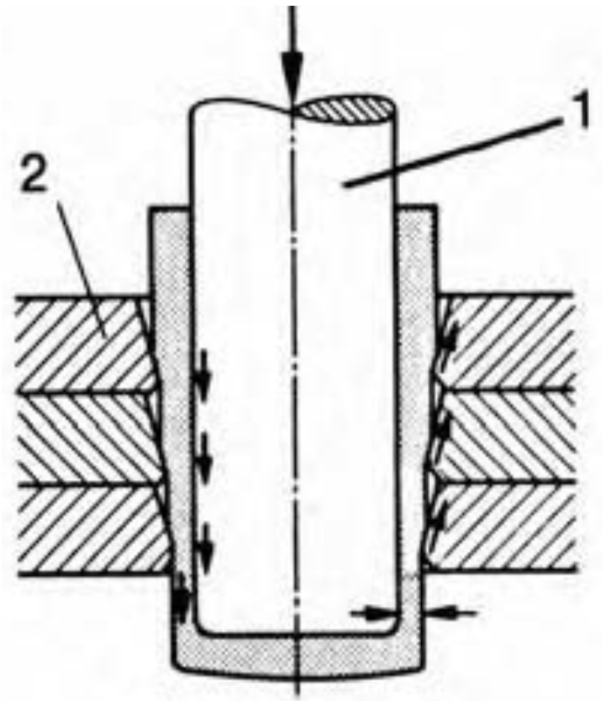

Tandem drawing

$$n = \frac{\varphi_p}{\varphi_{p\,perm}} = \frac{\left(\ln \frac{A_0}{A_n}\right) \cdot 100}{\varphi_{p\,perm}}$$

n – number of ironing operations required

A_0 – cross-sectional area before the first operation

A_n – cross-sectional area after the last (n^{th}) operation

$\varphi_{p\,perm}$ – permissible deformation per step

φ_p – principal strain.

Limit: $F < A_1\,\sigma_{flow} < A_1\,R_m$

If $F > A_1\,\sigma_{flow}$: a further, undesired deformation happens

If $F > A_1\,R_m$: then the cup splits off near the base

Forward extrusion

Thank you for your attention!